Thermoelectric cooler specification

4TE_1_std_VIGO

Ver 1.0

The drawings and the information provided with the drawings are the sole property of VIGO System S.A. Any disclosure or reproduction, in part or whole, without the written permission of VIGO System S.A. is prohibited.
VIGO System S.A. 129/133 Poznanska St., 05-850 Ozarow Mazowiecki, Poland, tel.: +48 22 733 54 06, fax: +48 22 733 54 26, email: info@vigo.com.pl
Please note: the information contained in the document is subject to change without further notification. VIGO System S.A. reserves the right to alter the performance and any resulting specifications.

Performance parameters

ΔTmax [K]	Qmax [W]	Imax [A]	Umax [V]	N	H [mm]	H' [mm]	H [mm]	ACR [Ω]	*Ra [µm]	**Centering [mm]	Ceramics
127±3	0.30±0.03	0.50	8.40	116	6.9±0.2	6.90±0.25	1	14.90±1.49	<0.1	0.2	Al2 O3

Performance data are given at 300K, vacuum
Tolerances in batch should not exceed more than ±5%

Definitions:

ΔTmax – Maximum temp. difference at I=Imax and Q=0, ΔT=ΔTmax(1-Q/Qmax)
ΔT – Temperature difference between cold side temp. and hot side temp.
Qmax – Maximum heat pumped at I=Imax and ΔT=0
Q – Heat pumped at the cold side [W]
Imax – Current resulting in greatest ΔT
Umax – Voltage drop at ΔTmax
N – number of pellets pairs (n+p)
H – height of the TEC
H' – height of the TEC mounted on TO8 (includes soldering between TEC and TO8)
h – height of the pellets

Top ceramics – polished
* Roughness of the Top ceramics
** Tolerance of the position of the center of the cooler cold side relative to the axis of the TO8 package

Technical drawing of the TEC

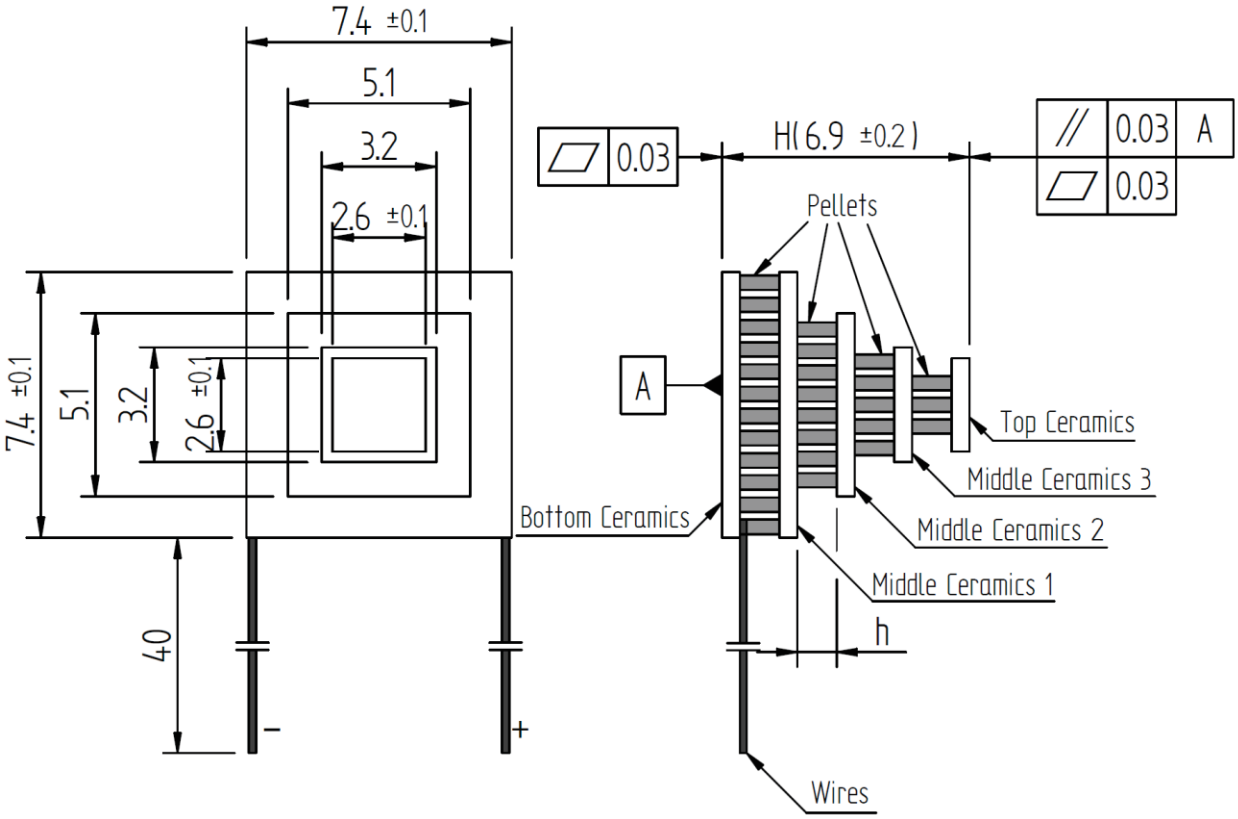

The drawings and the information provided with the drawings are the sole property of VIGO System S.A. Any disclosure or reproduction, in part or whole, without the written permission of VIGO System S.A. is prohibited.
VIGO System S.A. 129/133 Poznanska St., 05-850 Ozarow Mazowiecki, Poland, tel.: +48 22 733 54 06, fax: +48 22 733 54 26, email: info@vigo.com.pl
Please note: the information contained in the document is subject to change without further notification. VIGO System S.A. reserves the right to alter the performance and any resulting specifications.

TO8 0.6” type header

Header Base	Header pins	Glass Seal	Mounting Screw	Finishing Plating Type	Hermeticity $[\frac{ccHe}{sec}]$
ASTM F-15 Alloy Kovar Au plated 1.27 um	ASTM F-15 Alloy Kovar Au plated 1.27 um	Corning Glass non-transparent Corning 7052 or equivalent	CRS (Cold Rolled Steel) 4-40 UNC	Galvanic Au 1.27 um Au over 1.27-3.8 um Sulfamate Ni	10^{-8}

Technical drawing of the TEC mounted on TO8 0.6” type header

TEC should be mounted on TO8 type 0.6” header.
H’ tolerance includes a soldering

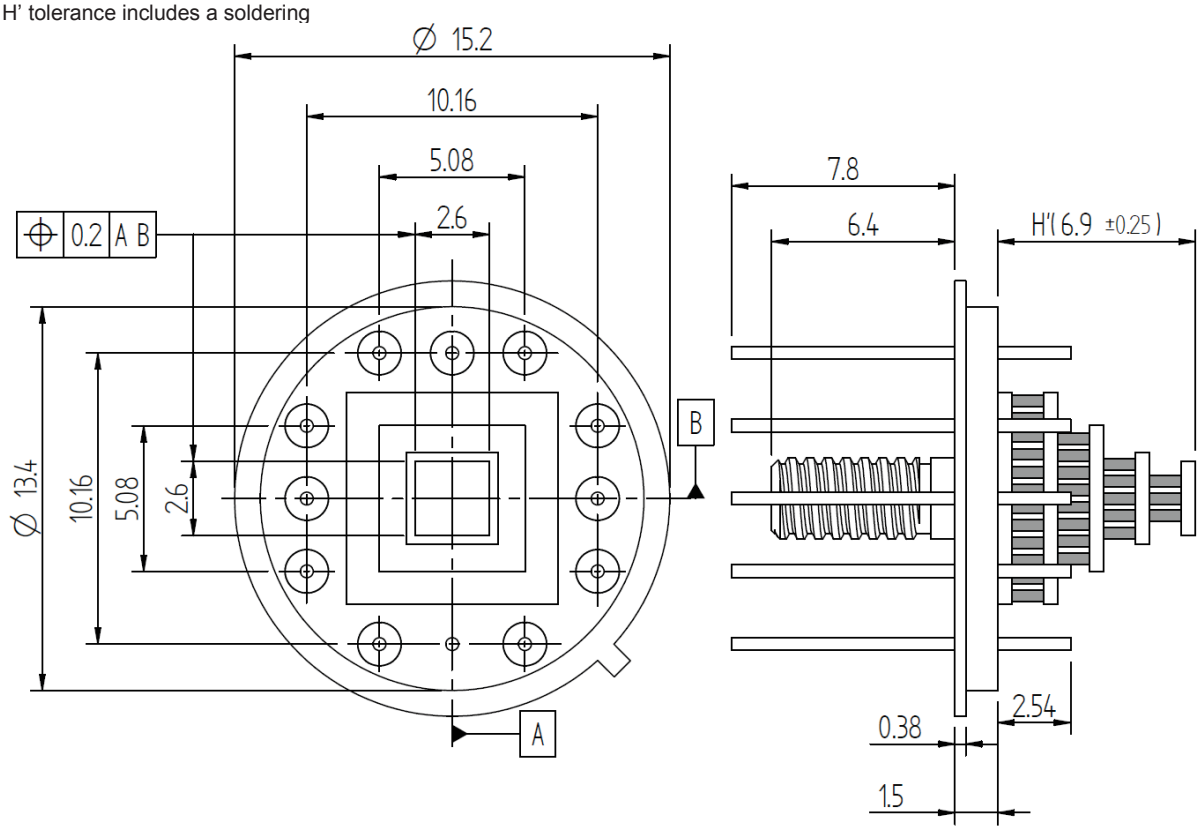

Center of the Top ceramics should be in the center of TO8 header.

Mounting parameters

TEC mounting to a header	Soldering, 206°C, Sn-Ag-Cu-In or Sn-Ag-Bi, RoHS
TEC assembly	Soldering, 230°C, Sn-Sb, RoHS
Wireless mounting	Soldering, 230°C, Sn-Sb, RoHS

The drawings and the information provided with the drawings are the sole property of VIGO System S.A. Any disclosure or reproduction, in part or whole, without the written permission of VIGO System S.A. is prohibited.
VIGO System S.A. 129/133 Poznanska St., 05-850 Ozarow Mazowiecki, Poland, tel.: +48 22 733 54 06, fax: +48 22 733 54 26, email: info@vigo.com.pl
Please note: the information contained in the document is subject to change without further notification. VIGO System S.A. reserves the right to alter the performance and any resulting specifications.